| ITEM NO. | DESCRIPTION | REQ.D | MATERIAL | REFERENCES |
|---|---|---|---|---|
| 1 | FRAME | 1 | CR/MS | |
| 2 | DRYING FILTER UNIT | 1 | | |
| 3 | RENERATION FILTER | 1 | | |
| 4 | DRYING BLOWER | 1 | HO HSING | REF. TABLE-1 |
| 5 | REGENERATION BLOWER | 1 | HO HSING | REF. TABLE-1 |
| 6 | HONEYCOMB ROTOR UNIT | 1 | | MZC-300H30-S<br>REF. TABLE-1 |
| 7 | REGENRATION HEATER | 1 | | REF. TABLE-1 |
| 8 | HEAT EXCHANGER | 4 | | OPTIONAL |
| 9 | COOLING WATER IN | 1 | | 1/2 B |
| 10 | COOLING WATER OUT | 1 | | 1/2 B |

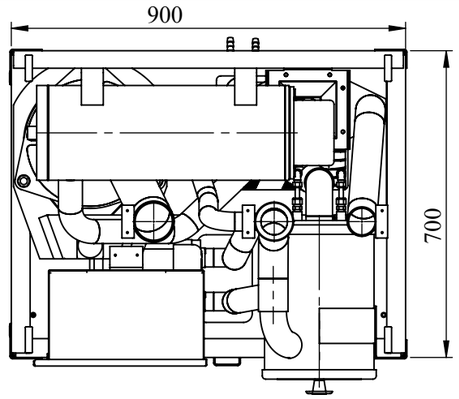


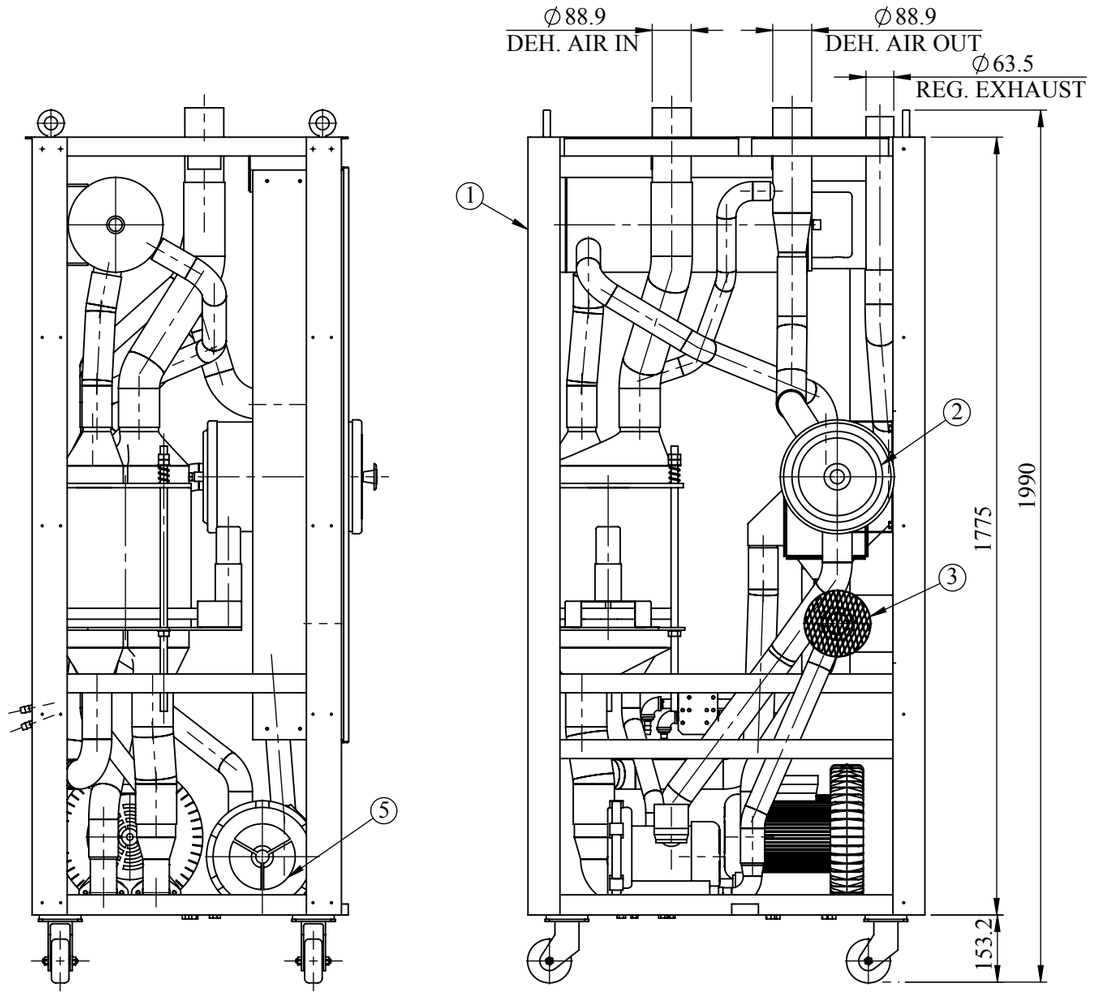


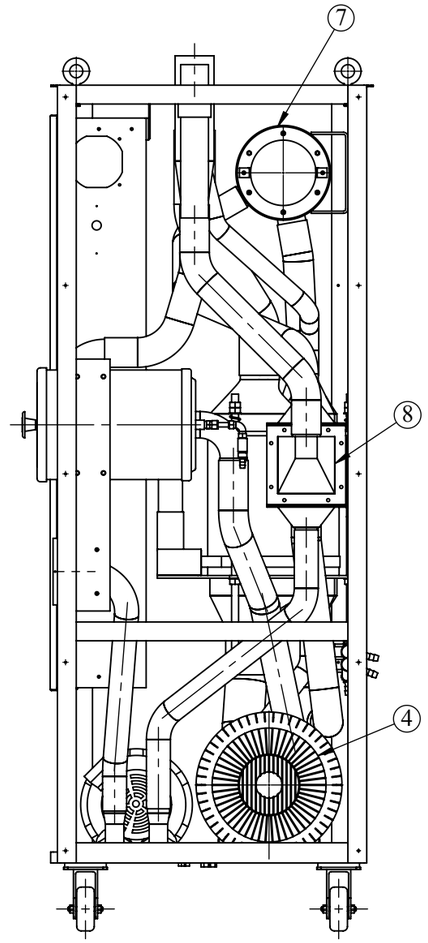


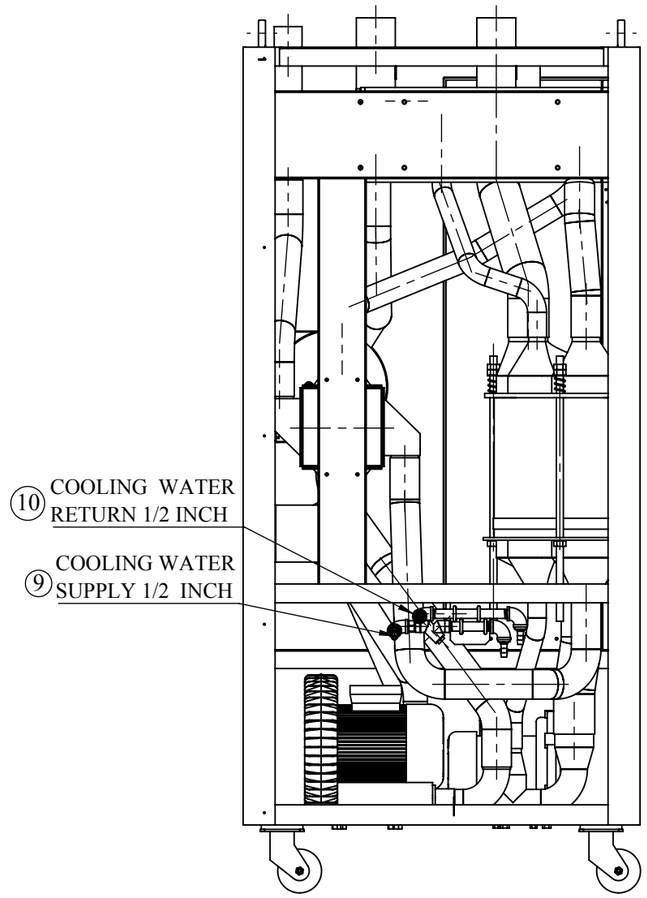


**TABLE -1 (LOCAL SPECIFICATION)**

| ITEM NO. | DESCRIPTION | ASIA AREA A,J VERSION | USA AREA U VERSION |
|---|---|---|---|
| 4 | DRYING BLOWER | RB50-520<br>200/220/380V | RB50-53U<br>230V/460V |
| 5 | REGENERATION BLOWER | RB30-520<br>200/220/380V | RB30-53U<br>230V/460V |
| 6 | HONEYCOMB ROTOR UNIT | AC200V | AC100V<br>UL |
| 7 | REGENERATION HEATER | 5.8 KW/200V (△)<br>7.0 KW/200V (△)<br>6.9 KW/380V (Y) | 5.8 KW/230V (Y)<br>7.7 KW/460V (Y) |

| REVISION | | | | | |
|---|---|---|---|---|---|
| | △ | | | | |
| | △ | | | | |
| | △ | | | | |
| | MARK | DATE | CONTENTS | CHKD | APPD |

| | | | |
|---|---|---|---|
| NAME | INTERNAL DETAIL DEHUMIDIFYING UNIT | FORM | DMZ2-170 |
| APPROVED BY | | CODE NO. | |
| CHECKED BY | SANDEEP SAH | DATE | 05-01-18 |
| DRAWN BY | AMIT SAINI | UNIT MM | |
| SCALE | NTS. | DWG. NO. | AS180105A04-0 |
| MATSUI TECHNOLOGIES INDIA LIMITED | | | |